E: sales@popup-stands-uk.co.uk
T: 0116 2047757

Lightbox Counter User guide

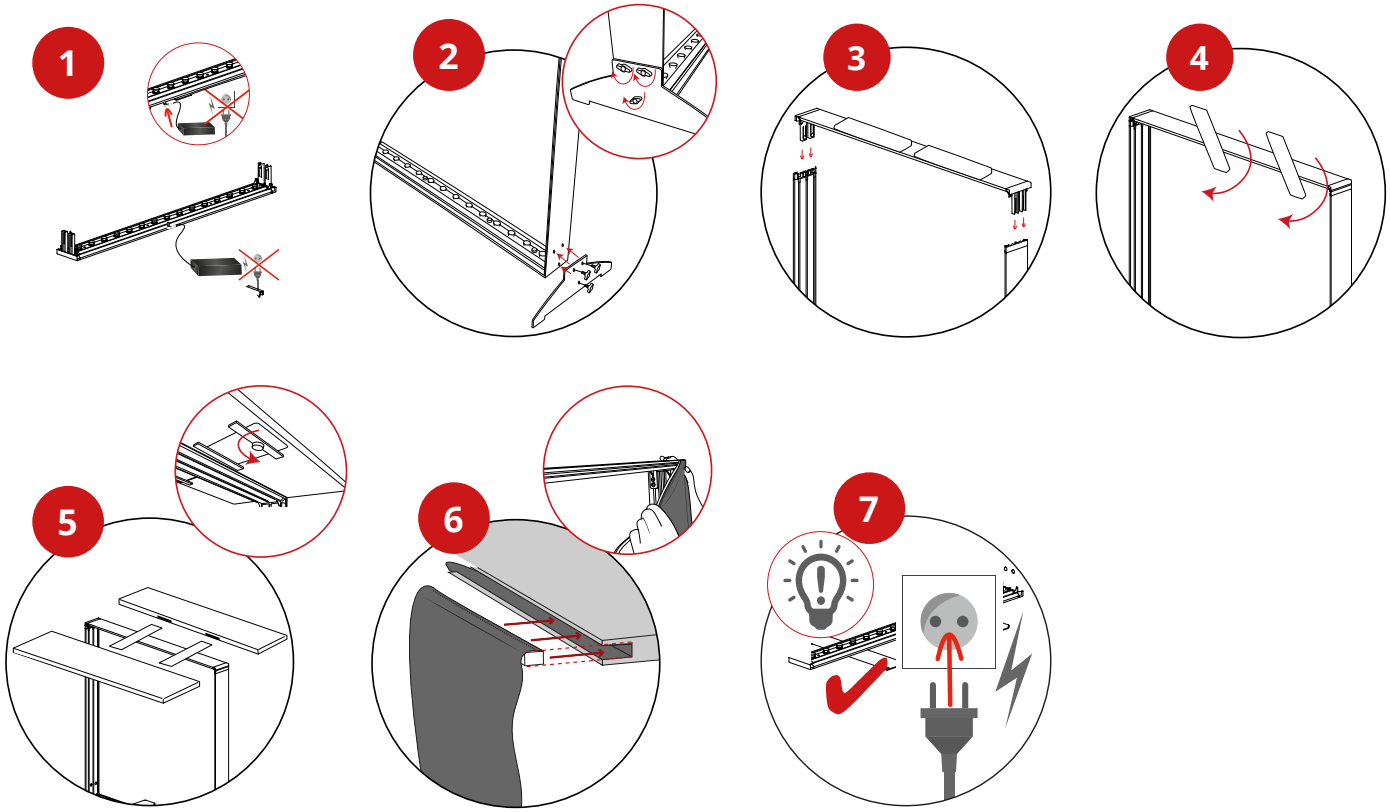

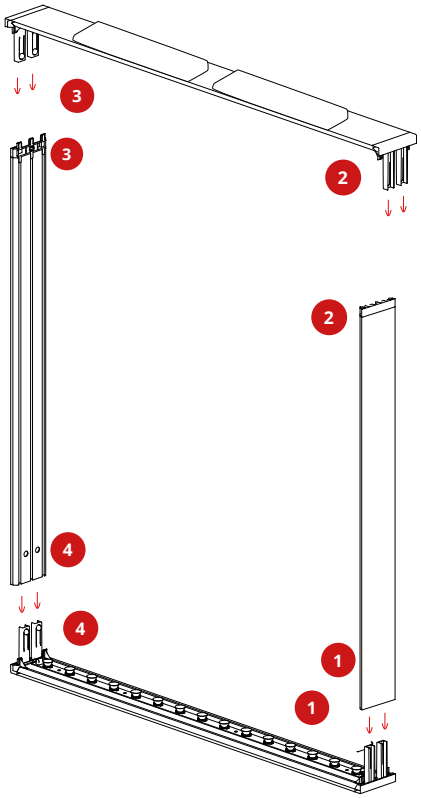

www.popup-stands-uk.co.uk